standard presses

standard presses

H-frame presses

Hand-operated hydraulic presses
Air-operated hydraulic presses
Elec-draulic I hydraulic presses
Elec-draulic II hydraulic presses
Movable table hydraulic presses
Dura-press hydraulic presses
Tire presses

arbor presses

Single leverage arbor presses
Ratchet leverage arbor presses
Compound leverage arbor presses

other presses

Air-operated bench presses
C-frame presses
Drill presses

DAKE®

Because your press work comes in all sizes, Dake makes presses in all sizes. What's more, our name has become synonymous with hard-working, long-lasting presses that are used in hundreds of applications and industries. And maybe that's because we've been building high-quality presses longer than anybody else.

H-Frame Presses

Dake offers hand, air, and electrically operated H-frame presses in 10 to 200 ton capacities, in single- and double-acting models. These presses are ideal for assembly, straightening, fabrication, quality control, maintenance, product testing, bending, forming, punching and shearing.

Press frames are constructed of heavy-duty arc-welded steel and can be easily modified to accommodate a wide range of pressing needs. Steel cylinders are fabricated of heavy-walled tubing, which is seamless to prevent leaks and is roller burnished on the ID to ensure long packing life. Workheads move easily on ball bearings, while easy-to-read gauges and controls are located at convenient working heights.

Perhaps the best thing about Dake H-frame presses is knowing that even if you push your press to its maximum pressure rating, it has already been factory tested at 10 percent greater pressure than that rating. That's a built-in feature to provide an added margin of safety.

Arbor Presses

Fact: nobody in the industry offers a wider range of tonnage and sizes in arbor presses than Dake. We manufacture 18 different arbor presses in standard single leverage, ratchet-type single leverage, and compound leverage models.

For strength and durability, all frames are cast of heavy reinforced steel and incorporate a flanged spline design which adds rigidity to the press body. Press bases are machined for maximum stability and drilled to permit bench or pedestal mounting.

Hardened-steel, precision-ground rams use a unique square design to provide larger bearing surface and ensure longer life than round rams.

Other Presses

Dake also offers air-operated bench presses, C-frame presses, and laboratory presses for a wide variety of industrial applications.

Air-operated bench presses offer economy and efficiency for light industrial work. Heavy-duty cast iron frames ensure precision work by minimizing frame deflection. High quality pistons and cylinders ensure optimum performance and long life.

For high-speed, low-cost operation, consider our **C-frame press**. Features include adjustable stroke return, pressure adjustment, safety light-sensitive thumb pads, and a run-jog selector for easy set up. Its heavy-duty steel weldment frame ensures strength and rigidity.

Dake Drill Presses are available in the most popular bench and floor capacities. The massive cast head reduces vibration and chatter. A locking handle hub has convenient dial-in adjustment for repeatable depth settings.

Dake quality

Hand-Operated Hydraulic Presses

Our most popular selling press model

features

- **Hand operation** for economical performance.
- **Rapid ram return** starts as soon as release valve is opened and may be stopped at any point by closing the valve.
- **By-pass hole** prevents excessive ram extension.
- **Adjustable table** permits easy vertical movement by means of self-locking hoist.
- **Rapid screw traverse of ram** permits quick, easy movement of the ram by means of a convenient handwheel.
- **Movable workhead** is roller mounted on ball bearings for off-center positioning (except 25H).

specifications

model	*number*	*capacity*
		tons
25H	07001	**25**
50H	07002	**50**
75H	07003	**75**
125H	07004	**125**

Specifications subject to change without notice.

DAKE®

For more information call 800-937-3253

models

25H
- *25 ton capacity*

50H
- *50 ton capacity*

75H
- *75 ton capacity*

125H
- *125 ton capacity*

standard equipment

- **Frame**
- **Workhead**
- **Two forged steel V-blocks**
- **Two forged steel table plates** *(25 ton model has two combination table plates with V-blocks)*
- **Flat ram nose**
- **V-ram nose** *(N/A on 25 ton model)*
- **Pressure gauge**
- **Self-locking table hoist**

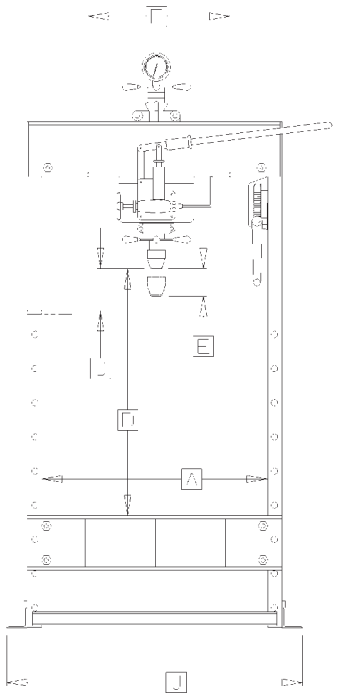

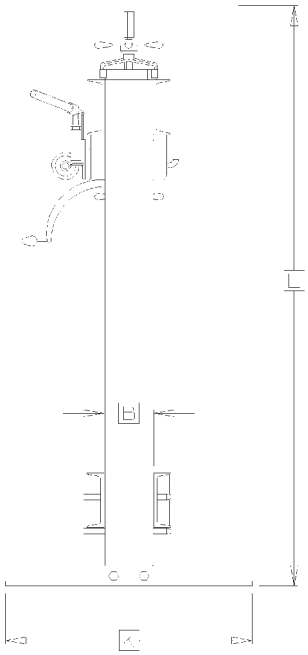

A	B	C	D	E	F		J x K	L	
width between uprights	*width between table channels*	*minimum ram to table*	*maximum ram to table*	*ram travel*	*horizontal workhead travel*	*screw travel*	*base*	*height*	*weight*
inches	*inches*	*inches*	*inches*	*inches*	*inches*	*inches*	*inches*	*inches*	*pounds*
33½	5 3/16	4	39	5		5	42½ x 30	76	450
32¾	7¼	5	40	4	20¾	7	43½ x 36	85	810
44	8¼	6	36	4½	29⅝	7	55 x 36	87	1245
48	12⅛	5	25	8	27¼	8	66 x 42	95	2750

Air-Operated Hydraulic Presses

Takes all the physical effort out of hand pumping. Can double pressing speed.

features

- **Air operation** eliminates the need for hand pumping.
- **Rapid ram approach** quickly moves ram to work to save production time.
- **Safety valve** protects against overloads.
- **Stroke indicator** ensures accurate ram control.
- **Movable workhead** is roller mounted on ball bearings for off-center work.
- **By-pass hole** eliminates excessive ram extension.
- **Dual air pumps,** for faster pressing speeds, available on some models.
- **Adjustable table** permits easy vertical movement by means of self-locking hoist.

specifications

model	number	capacity	ram speed		number of pumps	air pressure
		tons	inches per minute			pounds
			advance	press*		
6-225	06225	**25**	110	6	1	90-125
6-425	06425	**25**	100	10	2	90-125
6-250	06250	**50**	65	3	1	90-125
6-450	06450	**50**	55	5	2	90-125
6-275	06275	**75**	45	2	1	90-125
6-475	06475	**75**	40	3½	2	90-125
6-650	06650	**150**	25	1	1	90-125
6-850	06850	**150**	22	2	2	90-125
6-900	06900	**200**	22	2	2	90-125

*Slows Down Under Load

Specifications subject to change without notice.

DAKE®

For more information call 800-937-3253

models

6-225
- *25 ton capacity*
- *Single pump*

6-425
- *25 ton capacity*
- *Dual pumps*

6-250
- *50 ton capacity*
- *Single pump*

6-450
- *50 ton capacity*
- *Dual pumps*

6-275
- *75 ton capacity*
- *Single pump*

6-475
- *75 ton capacity*
- *Dual pumps*

6-650
- *150 ton capacity*
- *Single pump*

6-850
- *150 ton capacity*
- *Dual pumps*

6-900
- *200 ton capacity*
- *Dual pumps*

standard equipment

- **Frame**
- **Workhead**
- **Two forged steel V-blocks**
- **Two forged steel table plates**
- **Flat ram nose**
- **V-ram nose** *(N/A on 25 ton model)*
- **Stroke indicator**
- **Pressure gauge**
- **Safety relief valve**
- **Self-locking table hoist**

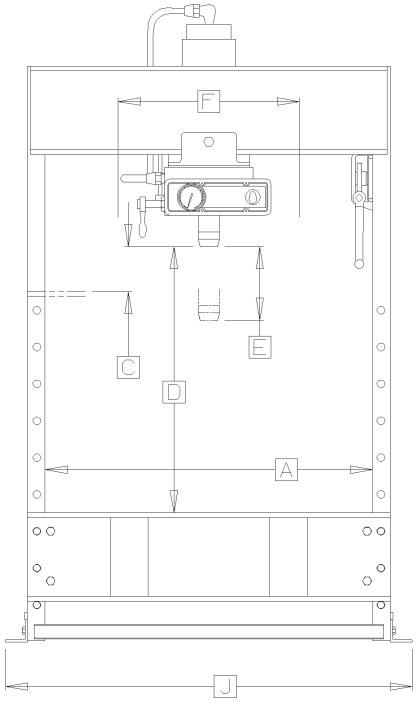

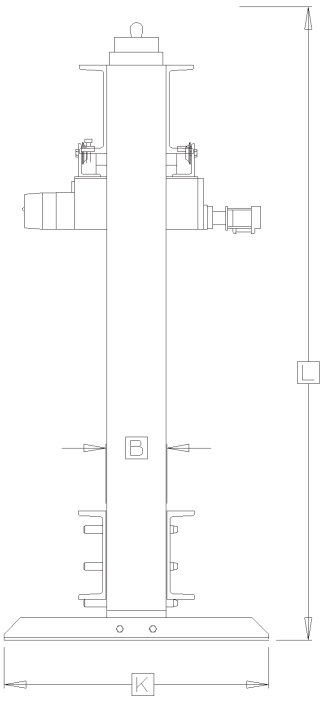

A width between uprights	B width between table channels	C minimum ram to table	D maximum ram to table	E ram travel	F horizontal workhead travel	J x K base	L height	weight
inches	*inches*	*inches*	*inches*	*inches*	*inches*	*inches*	*inches*	*pounds*
33½	5 3/16	1	36	10	13½	42½ x 30	81	750
33½	5 3/16	1	36	10	13½	42½ x 30	81	800
32¾	7¼	5	40	10	13¼	43½ x 36	87	1100
32¾	7¼	5	40	10	13¼	43½ x 36	87	1150
44	8¼	6	36	10	24⅝	55 x 36	86	1500
44	8¼	6	36	10	24⅝	55 x 36	86	1550
48	12¼	10	30	16	21⅞	66 x 42	95	3000
48	12¼	10	30	16	21⅞	66 x 42	95	3050
48	18¼	6	30	16	21	64 x 48	100	4380

Elec-draulic I Hydraulic Presses

An advanced design, single-acting press with fingertip control

features

- **Electric operation** provides smooth, consistent pressing action.
- **Single-acting cylinder** provides fast, reliable pressing and internal spring return.
- **Rapid ram approach** quickly moves ram to work to save production time.
- **Variable ram speed** allows fingertip control of ram movement for precise pressure control.
- **Movable workhead** is roller mounted on ball bearings for off-center work.
- **Rapid ram return** starts ram return as soon as release valve is opened and may be stopped at any point by closing the valve.
- **Safety valve** protects against overloads.
- **Stroke indicator** ensures accurate ram control.
- **Adjustable table** permits easy vertical movement by means of self-locking hoist.

specifications

model	*number*	*capacity*	*horsepower*	*rpm*	*ram speed*	
		tons			*inches per minute*	
					advance	*press*
5-025	05025	**25**	2	1800	80	14
5-050	05050	**50**	2	1800	40	7
5-075	05075	**75**	2	1800	28	5
5-150	05150	**150**	2	1800	16	2¾
5-200	05200	**200**	3	1800	16	2¾

Specifications subject to change without notice.

DAKE®

For more information call 800-937-3253

models

5-025
- *25 ton capacity*

5-050
- *50 ton capacity*

5-075
- *75 ton capacity*

5-150
- *150 ton capacity*

5-200
- *200 ton capacity*

standard equipment

- **Frame**
- **Workhead**
- **Two forged steel V-blocks**
- **Two forged steel table plates**
- **Flat ram nose**
- **V-ram nose**
- **Motor**
  2, 3 hp
  230/460-3-60
- **Stroke indicator**
- **Pressure gauge**
- **Safety relief valve**
- **Self-locking table hoist**

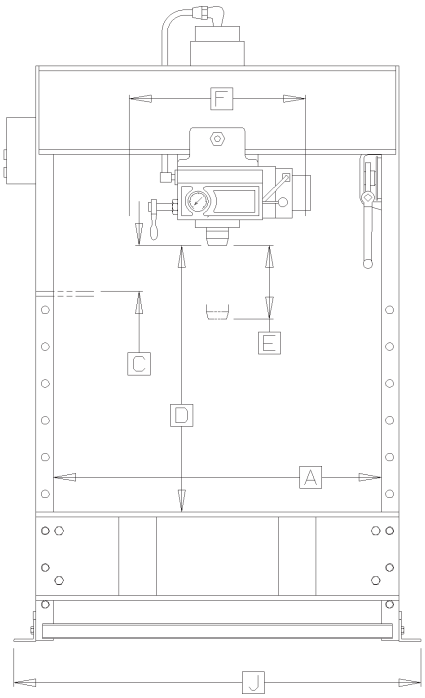

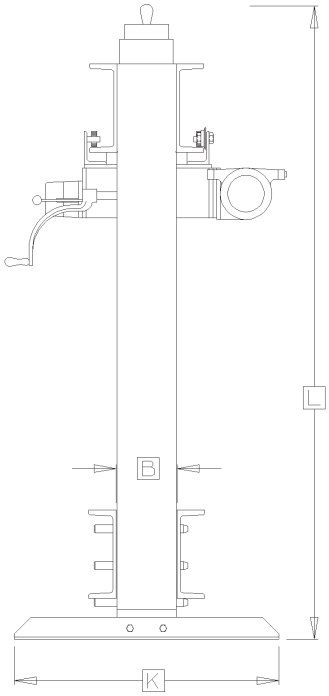

A	B	C	D	E	F	J x K	L	
width between uprights	*width between table channels*	*minimum ram to table*	*maximum ram to table*	*ram travel*	*horizontal workhead travel*	*base*	*height*	*weight*
inches	*inches*	*inches*	*inches*	*inches*	*inches*	*inches*	*inches*	*pounds*
32¾	7¼	5	40	10	14⅜	43½ x 36	85	1000
32¾	7¼	5	40	10	14⅜	43½ x 36	87	1320
44	8¼	6	36	10	24	55½ x 36	86	1650
48	12¼	10	30	16	24¾	66 x 42	95	3000
48	18¼	6	30	16	22⅛	64 x 48	100	4380

Elec-draulic II Hydraulic Presses

For super-sensitive, double-acting ram control and simple operation

features

- **Electric operation** provides smooth, consistent pressing action.
- **Double-acting cylinder** permits pulling as well as pressing ram action.
- **Variable ram speed** allows fingertip control of ram movement for precise pressure control.
- **Safety valve** protects against overloads.
- **H-frame mounted control** allows convenient control of press when workhead is out of operator's reach.
- **T-ring seals** prevent pressure loss.
- **Adjustable table** permits easy vertical movement by means of self-locking hoist.
- **Optional bolt flange** for tooling attachment may be substituted for flat ram nose.

specifications

model	number	capacity (tons) press	capacity (tons) pull	horsepower	rpm	ram speed (inches per minute) press	ram speed (inches per minute) return
8-025	08025	**25**	10	2	1800	15	35
8-050	08050	**50**	18	2	1800	8	22
8-075	08075	**75**	28	2	1800	5	15
8-080	08080	**75**	28	10	1800	30	80
8-150	08150	**150**	65	10	1800	17	38
8-200	08200	**200**	78	7½	1800	8	20

Specifications subject to change without notice.

DAKE®

For more information call 800-937-3253

models

8-025
- *25 ton capacity*

8-050
- *50 ton capacity*

8-075
- *75 ton capacity*

8-080
- *75 ton capacity*
- *Rapid ram approach and return*

8-150
- *150 ton capacity*

8-200
- *200 ton capacity*

standard equipment

- **Frame**
- **Double-acting workhead**
- **Two forged steel V-blocks**
- **Two forged steel table plates**
- **Flat ram nose**
- **Motor**
  2, 7½, 10hp
  230/460-3-60
- **Pump**
- **Pressure gauge**
- **Safety relief valve**
- **4-way throttling valve**
- **Self-locking table hoist**

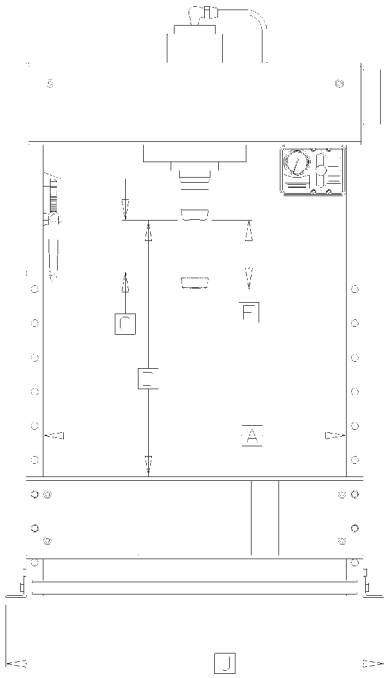

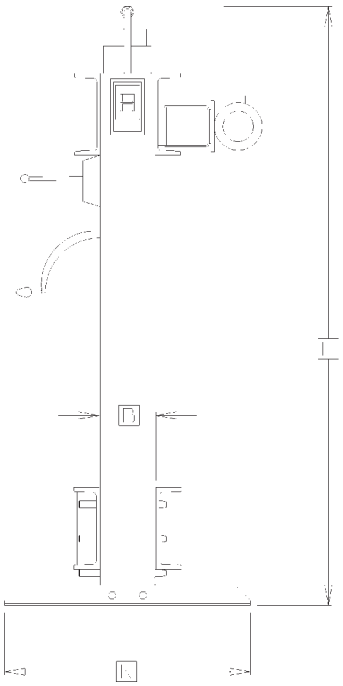

A	B	C	D	E	J x K	L	
width between uprights	*width between table channels*	*minimum ram to table*	*maximum ram to table*	*ram travel*	*base*	*height*	*weight*
inches	*inches*	*inches*	*inches*	*inches*	*inches*	*inches*	*pounds*
32¾	7¼	11¾	46¾	10	43½ x 36	83	1060
32¾	7¼	10⅛	45⅛	10	43½ x 36	86	1360
44	8¼	7⅝	37⅝	10	55½ x 36	86	1950
44	8¼	7⅝	37⅝	10	55½ x 36	86	2100
48	12¼	11¾	31¾	16	66 x 42	95	3620
48	18⅜	6	30	16	64 x 48	106	6100

Hydraulic Tire Presses

Removes tires from wheels quickly and easily

Model 33-587 Shown

features

- **150 ton capacity** for handling large fork lift tires.
- **Large 7¾" ram** provides platen stability and longer seal life.
- **Upper movable head channel** provides 15" of travel for easy set-up.
- **Easily removable pins** allow head channel to be set in four different positions.
- **Pressing rings** in diameters and face widths for all standard tire sizes. Contact factory for availability.
- **Eliminates outside servicing delays** and truck downtime.

specifications

model		capacity	motor horsepower	ram speed	
		tons		inches per minute	
				advance	return
33-493	Electric Powered	**150**	2	2¾	gravity
33-587	Air Powered	**150**	—	1½*	gravity
33-400	Gasoline Powered	**150**	8¼	7½	gravity

*Air Unit Equipped with Rapid Advance–30 I.P.M. Pressing Speed Rated At No Load–Slows Down With Load.
**Limit Switch Stops Ram At End Of Stroke.

Specifications subject to change without notice.

DAKE®

For more information call 800-937-3253

models

33-493
- *electric powered*

33-587
- *air powered*

33-400
- *gasoline powered*

optional equipment

- **Larger capacities** *available upon request*
- **Additional ram stroke**
- **Special frame sizes**
- **Different size pressing rings**

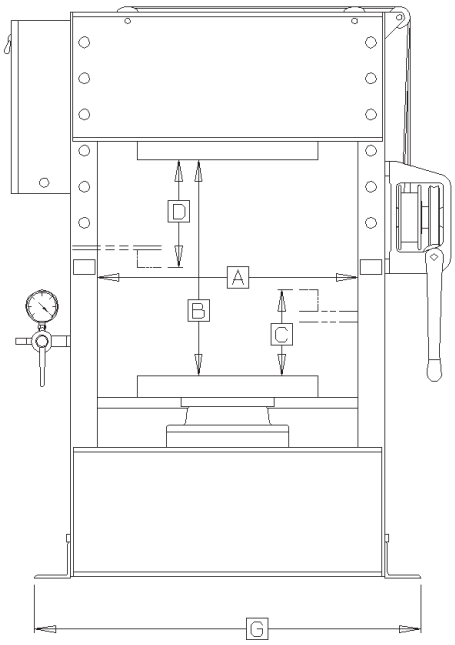

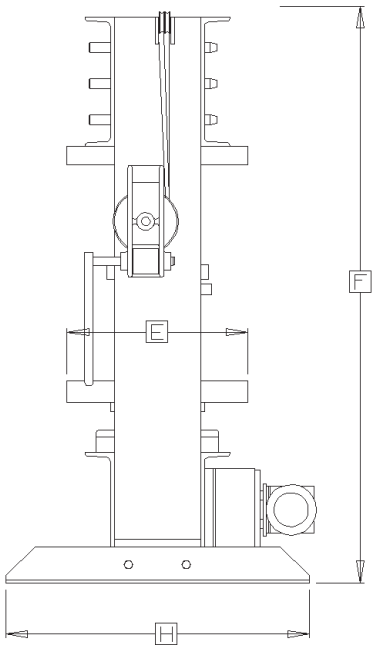

A	B	C	D	E	F	G x H	
width between uprights	*maximum daylight*	*ram travel*	*head channel travel*	*platen diameter*	*overall height*	*floor space*	*weight*
inches	*inches*	*inches*	*inches*	*inches*	*inches*	*inches*	*pounds*
36	30	12**	15	25	80	57 x 43	3,000
36	30	12	15	25	80	66 x 42	3,350
36	30	12	15	25	80	58 x 56	3,500

Movable Table Hydraulic Presses

Table rolls out to load heavy or awkward work, then returns easily into pressing position

features

- **Movable table** allows overhead loading of heavy workpieces.
- **Adjustable workhead height** provides maximum daylight for oversized work.
- **Heavy-duty hoist** easily raises and lowers workhead.
- **Toggle clamps** lock table securely in place.

options

- **Table plates**
- **V-blocks**

Model 42-502 Shown

specifications

model	operation	capacity		ram speed			horsepower
		press	table				
		tons	pounds	inches per minute			
				advance	press	return	
42-300	air	**25**	3500	110	6*		
42-400	elec-draulic I	**25**	3500	80	14		2
42-500	elec-draulic II	**25**	3500		15	35	2
42-304	air	**50**	3500	65	3*		
42-401	elec-draulic I	**50**	3500	40	7		2
42-501	elec-draulic II	**50**	3500		8	22	2
42-308	air	**75**	3800	45	2*		
42-402	elec-draulic I	**75**	3800	28	5		2
42-502	elec-draulic II	**75**	3800		5	15	2
42-312	air	**150**	4200	25	1*		
42-403	elec-draulic I	**150**	4200	16	2¾		2
42-503	elec-draulic II	**150**	4200		17	38	10

*Slows Down Under Load

Specifications subject to change without notice.

DAKE®

For more information call 800-937-3253

models

42-300
- *25 ton capacity*
- *Air-operated*

42-400
- *25 ton capacity*
- *Elec-draulic I*

42-500
- *25 ton capacity*
- *Elec-draulic II*

42-304
- *50 ton capacity*
- *Air-operated*

42-401
- *50 ton capacity*
- *Elec-draulic I*

42-501
- *50 ton capacity*
- *Elec-draulic II*

42-308
- *75 ton capacity*
- *Air-operated*

42-402
- *75 ton capacity*
- *Elec-draulic I*

42-502
- *75 ton capacity*
- *Elec-draulic II*

42-312
- *150 ton capacity*
- *Air-operated*

42-403
- *150 ton capacity*
- *Elec-draulic I*

42-503
- *150 ton capacity*
- *Elec-draulic II*

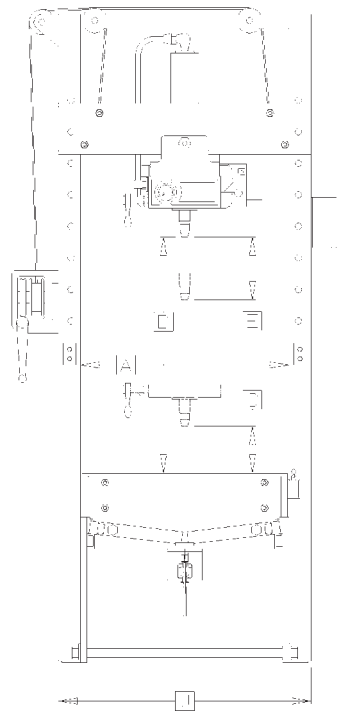

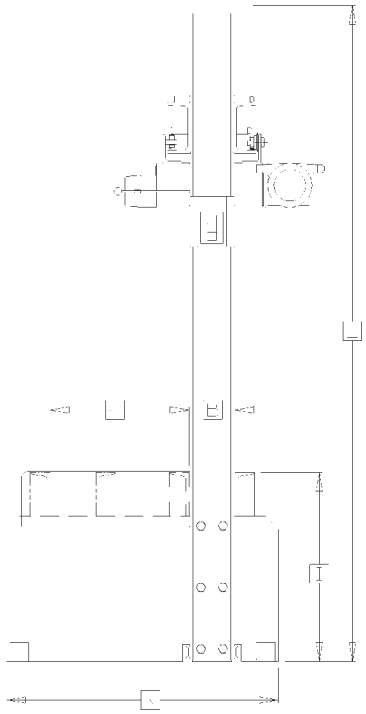

A	B	C	D	E	H	I	J x K	L
width between uprights	*width between table channels*	*minimum ram to table*	*maximum ram to table*	*ram travel*	*table travel*	*floor to table top*	*base*	*height*	*weight*
inches	*inches*	*inches*	*inches*	*inches*	*inches*	*inches*	*inches*	*inches*	*pounds*
32¾	7¼	7	37	10	22	30	37 x 43	100	1350
32¾	7¼	7	37	10	22	30	37 x 43	104	1450
32¾	7¼	12¼	42¼	10	22	30	37 x 43	110	1275
32¾	7¼	10⅞	40⅞	10	22	30	43 x 37	108	1500
32¾	7¼	10⅞	40⅞	10	22	30	43 x 37	108	2200
32¾	7¼	14	44	10	22	30	43 x 37	114	2200
44	8¼	11¾	41¾	10	22	30	47 x 52	110	2450
44	8¼	11¾	41¾	10	22	30	47 x 52	110	2650
44	8¼	13	43⅜	10	22	30	47 x 52	116	2950
48	12¼	14¼	64¼	16	30	34	58 x 56	145	3660
48	12¼	14¼	64¼	16	30	34	58 x 56	145	4700
48	12¼	15½	65½	16	30	34	58 x 56	150	4700

Utility H-frame Presses

The power of hydraulic pressure in a compact design

features

- **Fast, efficient** single speed hand pump with adjustable mounting for maximum ergonomic operation.
- **Large diameter,** single acting polished piston with internal spring return to eliminate external pinch points.
- **Convenient top mounted gauge** reads in tons and psi to monitor pressure.
- **The hydraulic pressing cylinder** can be relocated right or left of center for unusual work pieces.
- **Table can be adjusted** for maximum or minimum vertical opening to accommodate a variety of work pieces and to minimize required ram travel.

specifications

model	*number*	*operation*	*capacity*	*weight*
			press	
			tons	*pounds*
B-10	72200	manual	**10**	132
F-10	72210	manual	**10**	167

DAKE®

For more information call 800-937-3253

models

B-10
- *10 ton capacity*
- *bench mounted*

F-10
- *10 ton capacity*
- *floor mounted*

standard equipment

- **Frame**
- **Combination table plates and V-blocks**
- **Flat ram nose**
- **Step reduced ram nose (shown)**

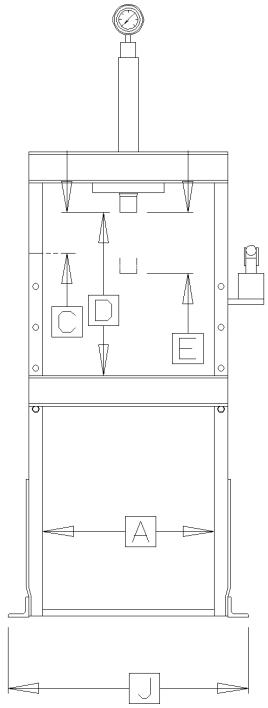

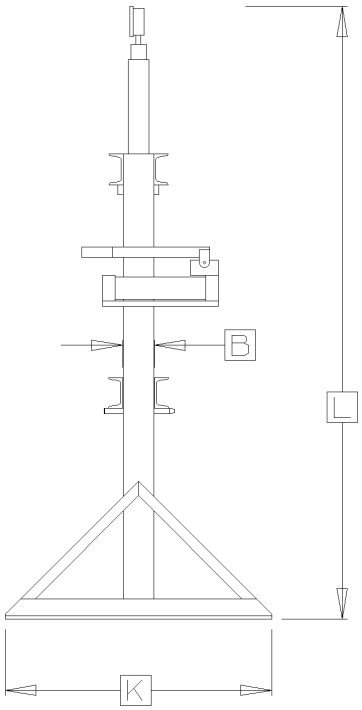

A	B	C	D	E	J x K	L
width between uprights	*width between table channels*	*minimum ram to table*	*maximum ram to table*	*ram travel*	*base*	*height*
inches	*inches*	*inches*	*inches*	*inches*	*inches*	*inches*
16¾	3	4	16	6	23x18	36
16¾	3	0-4	38	6	24x28	60

Dura-Press Hydraulic Presses

Affordable, easy to use, heavy duty

features

- **Simple, single acting cylinder** design with 5-part oil seals for smooth operation and a tight seal.
- **Welded heavy steel** plate frame for greater rigidity.
- **Efficient hand pump** is conveniently located to reduce operator fatigue.
- **Each full stroke** of the pump advances the ram ½".
- **Preset and factory-sealed** relief valve to prevent exceeding pressure capacity.

specifications

model	number	capacity	horsepower
		tons	
Force 10	72001	**10**	Manual
Force 20	72002	**20**	Manual

Specifications subject to change without notice.

DAKE®

For more information call 800-937-3253

models

Force 10
- *10 ton capacity*
- *Manual*

Force 20
- *20 ton capacity*
- *Manual*

standard equipment

- **Frame**
- **Cylinder**
- **2 forged steel table plates**
- **Gauge**

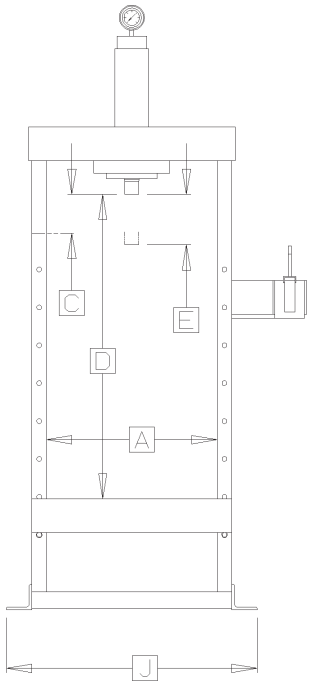

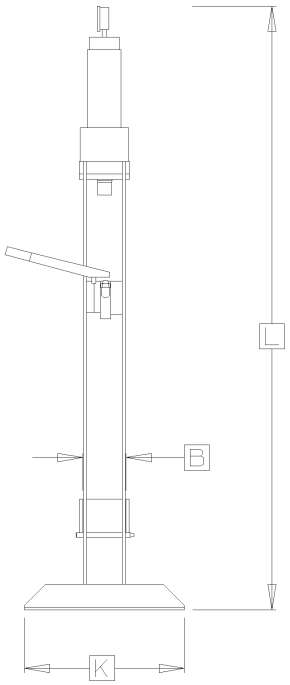

A	B	C	D	E	J x K	L	
width between uprights	*width between table channels*	*minimum ram to table*	*maximum ram to table*	*ram travel*	*base*	*height*	*weight*
inches	*inches*	*inches*	*inches*	*inches*	*inches*	*inches*	*pounds*
20	4	7	36	6	31x19	71	350
20	4	4½	34½	6	31x19	71	485

Dura-Press Hydraulic Presses

Designed to work the way you work

Force 10DA Shown

features

- **Electric power unit** has convenient single phase, 110 volt operation for greater portability.
- **Sturdy, welded channel iron frame** for durability.
- **Lever control ram advance** for easy operation.
- **Quiet, low pressure hydraulic components** for greater efficiency and smooth pressing.
- **Double acting cylinder** allows for convenient positioning of ram.
- **One hand ram positioning** with 4-way valve hydraulic control.

specifications

model	number	capacity	horsepower	rpm	ram speed
		tons			inches per minute
Force 10DA	09205	**10**	1	1725	20
Force 25DA	09215	**25**	1	1725	10

Specifications subject to change without notice.

DAKE®

For more information call 800-937-3253

models

Force 10DA
- *10 ton capacity*

Force 25DA
- *25 ton capacity*

standard equipment

- **Frame**
- **Two combination table plate/ V-blocks**
- **Motor**
  1 hp, 110 volt
- **Pressure gauge**
- **Safety relief valve**
- **Lifting chain** *(on 25 ton model)*

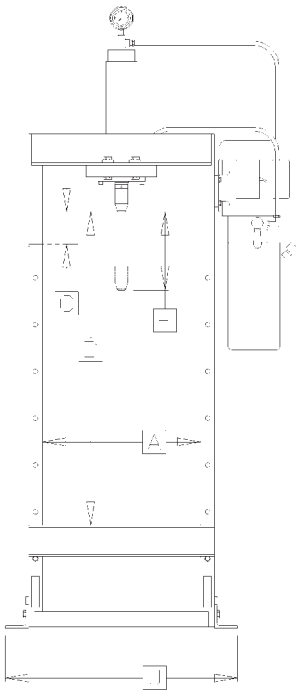

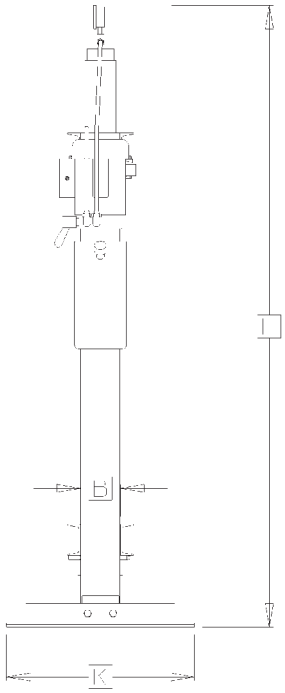

A	B	C	D	E	J x K	L	
width between uprights	*width between table channels*	*minimum ram to table*	*maximum ram to table*	*ram travel*	*base*	*height*	*weight*
inches	*inches*	*inches*	*inches*	*inches*	*inches*	*inches*	*pounds*
20	4	4	40	10	29¾ x 24	80	300
28	7	8	44	10	30 x 38	88	550

Dura-Press Hydraulic Presses

The price leader for a total capability press

features

- **Double acting cylinder** design with 5-part oil seals for smooth operation and a tight seal.
- **Ram has lifting eyes** that attach a chain to hydraulically move the table.
- **Welded heavy steel plate frame** for greater rigidity. With open sides for greater accessibility.
- **2 HP submerged motor** drives two centrifugal pumps for quiet, steady oil flow (40 and 70 ton models).
- **3 HP submerged motor** drives 3 centrifugal pumps for quiet, steady oil flow (100 ton model).
- **Smooth, responsive** control valve.
- **All electrical controls** are low voltage (24V).
- **Rapid advance of the ram** to the work piece—speed shifts automatically when contact is made.
- **Preset and factory-sealed** relief valve to prevent exceeding pressure capacity.

specifications

model	number	capacity	horsepower	ram speed advance	ram speed pressing
		tons		ipm	ipm
Force 40	72003	**40**	2	68	7
Force 70	72004	**70**	2	42	4
Force 100	72005	**100**	3	52	3

Specifications subject to change without notice.

DAKE®

For more information call 800-937-3253

models

Force 40
- *40 ton capacity*
- *Electric*

Force 70
- *70 ton capacity*
- *Electric*

Force 100
- *100 ton capacity*
- *Electric*

standard equipment

- **Frame**
- **Cylinder**
- **2 forged steel table plates**
- **Pressure gauge**
- **Lifting chain**

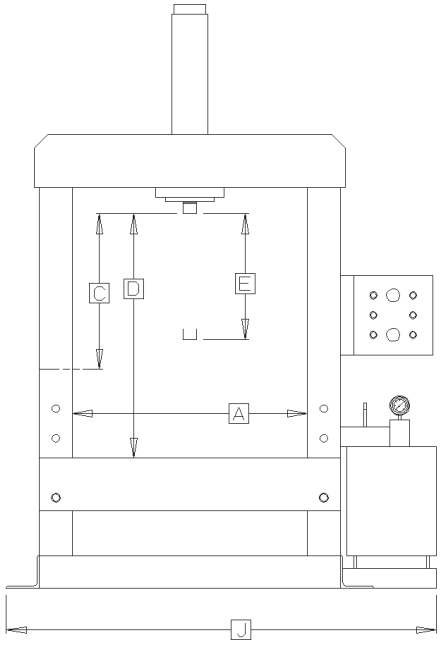

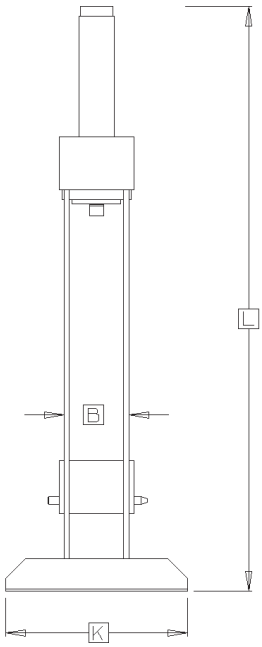

A	B	C	D	E	J x K	L	
width between uprights	*width between table channels*	*minimum ram to table*	*maximum ram to table*	*ram travel*	*base*	*height*	*weight*
inches	*inches*	*inches*	*inches*	*inches*	*inches*	*inches*	*pounds*
35	8	7	32	19	63 x 27	88	880
35	8	7¼	32	19	63 x 27	88	1100
41	10	7⅞	35	19	75 x 33	90	2200

Single Leverage Arbor Presses

Here's the press you'll find in just about every manufacturing plant in the country. It's a Dake.

features

- **Shimmed ram cap** permits take-up for potential wear.
- **Adjustable handle** allows convenient handle positioning.
- **Smooth action gears** permit finite ram control.
- **Base opening and slotted table plate** for arbor work (models X and Y have a solid plate).
- **Pedestals** available for models Y, 0 and 1.

specifications

model	*number*	*capacity*	*leverage ratio*	*ram size*	*maximum diameter work*
		tons		*inches*	*inches*
X	01001	**1**	25:1	1 x 1 x 7½	7
Y	01002	**1½**	32:1	1 x 1 x 12	9
00	01004	**1**	25:1	1 x 1 x 7½	7
0	01005	**1½**	32:1	1 x 1 x 12	9
1	01006	**3**	36:1	1¼ x 1¼ x 16½	14

Specifications subject to change without notice.

DAKE®

For more information call 800-937-3253

models

X
- *1 ton capacity*
- *Solid table*
- *Friction brake*

Y
- *1½ ton capacity*
- *Solid table*
- *Friction brake*
- *Pedestal available*

00
- *1 ton capacity*
- *Slotted table*
- *Friction brake*

0
- *1½ ton capacity*
- *Slotted table*
- *Friction brake*
- *Pedestal available*

1
- *3 ton capacity*
- *Slotted table*
- *Friction brake*
- *Pedestal available*

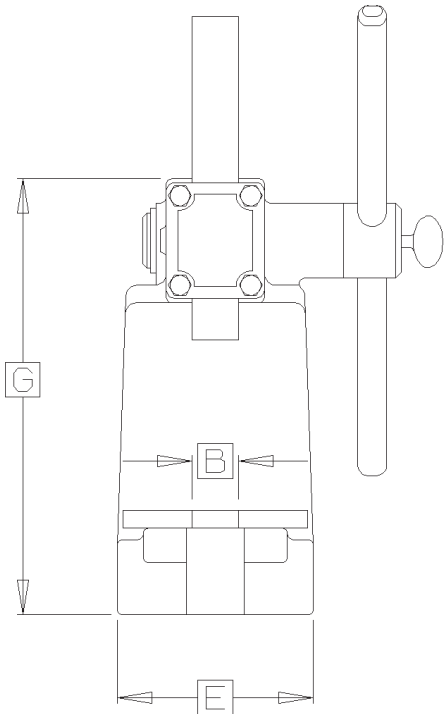

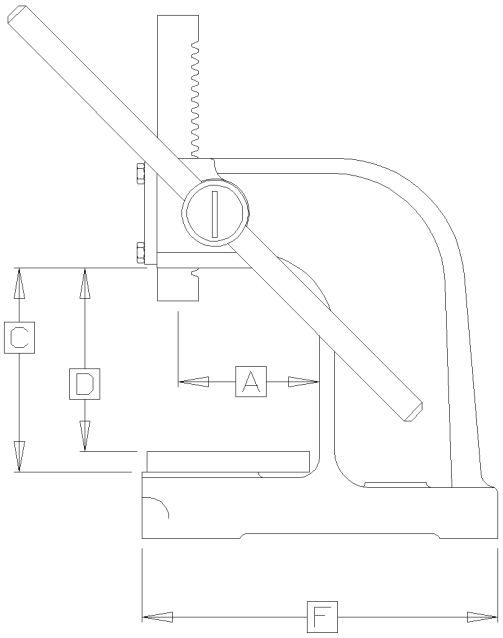

A throat	B largest arbor	C maximum ram to table	D maximum ram to table plate	E x F base	G height	weight	pedestal specifications: part number	base	height	weight
	inches	inches	inches	inches	inches	pounds		inches	inches	pounds
3½		4½		4¼ x 9½	9	25				
4½		7¾		6 x 15	14½	60	01003	10 x 18	36	50
3½	1	5	4½	4¼ x 9	9⅜	25				
4½	1	7¾	7⅛	6 x 14	14½	65	01003	10 x 18	36	50
7	2	11½	10¾	7¼ x 18	19	130	01007	12 x 21	36	70

Ratchet Lever Arbor Presses

Designed to work the way it's most comfortable for you

features

- **Ratchet device** permits lever to be used in most convenient position.
- **Handwheel** advances ram to work quickly.
- **Counterweight** returns lever quickly after downstroke.
- **Pedestals** available for models 1½, 1½B and 3A.

specifications

model	number	capacity	leverage ratio	ram size	maximum diameter work
		tons		inches	inches
1½	02001	**3**	48:1	1¼ x 1¼ x 16½	14
1½B	02002	**3**	48:1	1¼ x 1¼ x 24½	14
1½C	02003	**3**	48:1	1¼ x 1¼ x 24¼	35
1¾	02007	**3**	48:1	1¼ x 1¼ x 16½	14
3A	02004	**5**	55:1	2 x 2 x 23	20
4M	02006	**5**	55:1	2 x 2 x 23	20

Specifications subject to change without notice.

DAKE®

For more information call 800-937-3253

models

1½
- 3 ton capacity
- Fixed table
- Friction brake
- Bench model
- Pedestal available

1½B
- 3 ton capacity
- Fixed table
- Designed for broaching
- Friction brake
- Bench model
- Pedestal available

1½C
- 3 ton capacity
- Fixed table
- Designed for large diameter work pieces
- Bench model

1¾
- 3 ton capacity
- Fixed table
- Friction brake
- Side-mount model

3A
- 5 ton capacity
- Fixed table
- Hand-operated brake
- Bench model
- Pedestal available

4M
- 5 ton capacity
- Adjustable table
- Mandrel catcher on base
- Hand-operated brake
- Floor model

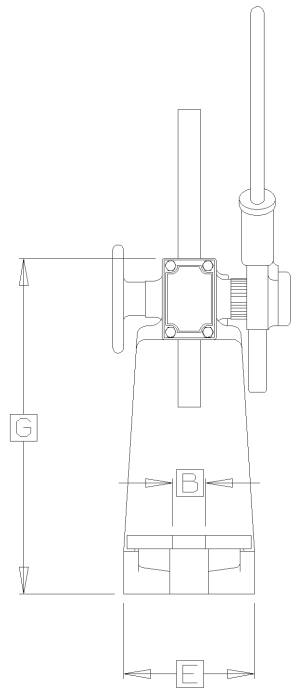

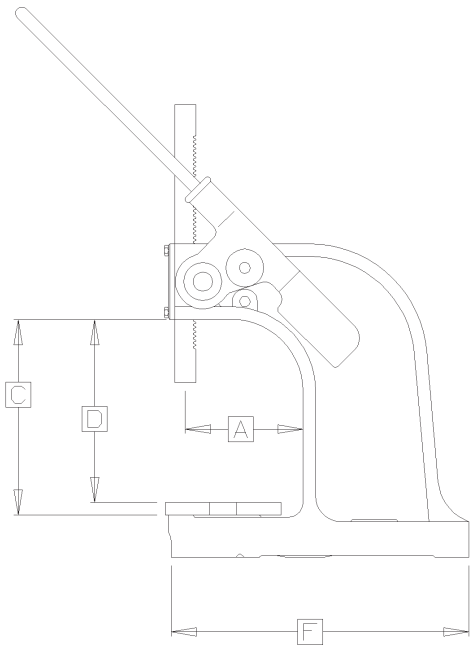

A throat	B largest arbor	C capacity over table	D capacity over table plate	E x F base	G height	weight	pedestal specifications: part number	base	height	weight
	inches	inches	inches	inches	inches	pounds		inches	inches	pounds
7	2	11½	10¾	7¼ x 18	19	145	01007	12 x 21	36	70
7	2	18¼	17½	8¼ x 21	28	196	03002	18 x 24	33	125
17½	2	12	11¼	8¼ x 37¼	24⅜	425				
7	2	11½	10¾		18½	125				
10	4	16	14½	10 x 24	28½	450	02005	18 x 28½	33	150
10	5¼	26	24½	21½ x 29	58	1045				

Compound Leverage Arbor Presses

Steps up the pressure for heavier press work

features

- **Compound leverage mechanism** allows greater pressure application with minimum effort.
- **Sliding pin** easily converts press from compound to single leverage.
- **Rack and pinion table adjustment** on model 4.
- **Dual swinging tables** for height adjustment on model 5.
- **Pedestals** available on all bench models.

specifications

model	number	capacity	leverage ratio	ram size	maximum diameter work
		tons		inches	inches
2	03004	**6**	66:1	1½ x 1½ x 19	15½
2B	03001	**6**	66:1	1½ x 1½ x 19	15½
2½	03003	**6**	66:1	1½ x 1½ x 27	15½
3	03005	**12**	112:1	2 x 2 x 24	20
4	03007	**12**	112:1	2 x 2 x 24	20
5	03008	**15**	150:1	2 x 2 x 24	24½

Specifications subject to change without notice.

DAKE®

For more information call 800-937-3253

models

2
- 6 ton capacity
- Fixed table
- Hand-operated brake
- Bench model
- Pedestal available

2B
- 6 ton capacity
- Fixed table
- Large arbor designed for electrical and generator work
- Hand-operated brake
- Bench model
- Pedestal available

2½
- 6 ton capacity
- Fixed table
- Designed for broaching
- Hand-operated brake
- Bench model
- Pedestal available

3
- 12 ton capacity
- Fixed table
- Hand-operated brake
- Bench model
- Pedestal available

4
- 12 ton capacity
- Adjustable table
- Hand-operated brake
- Floor model

5
- 15 ton capacity
- Two swinging tables
- Hand-operated brake
- Floor model

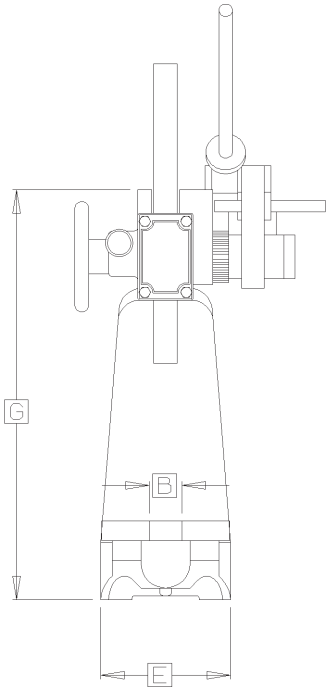

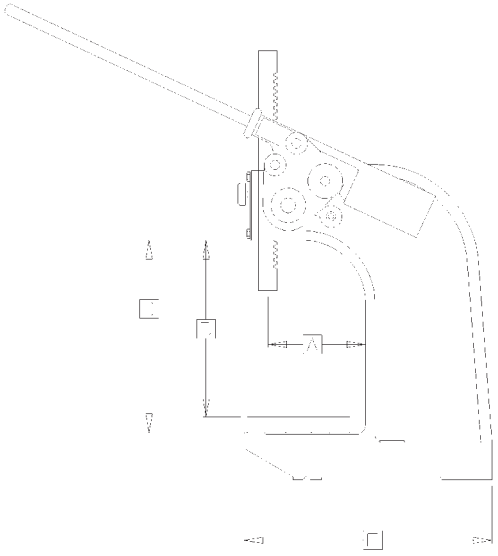

A throat	B largest arbor	C maximum ram to table	D maximum ram to table plate	E x F base	G height	weight	pedestal specifications part number	base	height	weight
	inches	inches	inches	inches	inches	pounds		inches	inches	pounds
7¾	3	15	13¾	8¼ x 20	26	260	03002	18 x 24	33	125
7¾	5½	15	14	8¼ x 20	26	280	03002	18 x 24	33	125
7¾	3	21½	20¼	8¼ x 20	32½	315	03002	18 x 24	33	125
10	5¼	19	17¼	13 x 25½	35½	640	03006	21 x 30	27½	180
10	5¼	26	24½	21½ x 37	62	1350				
12¼	5½	46	16	27 x 32½	64½	1800				

Air-Operated Bench Presses

Look for these two essential features in any bench press—a cast iron frame and a quality air cylinder. Dake's got 'em.

features

- **Non-rotating double acting ram** eliminates guide pins on most tooling.
- **Chrome-plated piston rod** resists rust and ensures long life.
- **Threaded rod end** permits nose piece and tooling to be easily attached and detached.
- **Easily adjusted** ram speed, pressure, and stroke allow accurate control of ram movement.
- **Dual-palm push buttons** must be engaged before the ram will move and cannot be mechanically by-passed.
- **Polyurethane rod wiper** protects cylinders from dust and contaminants.
- **Air filter/regulator** combination assembly ensures clean and continuous air flow to press.
- **Daylight** can be increased with ease.

Note: *Press is shown without point of operation guarding. Guarding is required for safe operation—See ANSI B 11.2 bulletin.*

specifications

model	number	capacity	air pressure	ram travel	weight
		pounds	*psi*	*inches*	*pounds*
1-204	01204	**400**	90	2	70
1-210	01210	**1000**	85	4	110
1-220	01220	**2000**	100	4	195

Specifications subject to change without notice.

DAKE®

For more information call 800-937-3253

models

1-204
- *400 pound capacity*

1-210
- *1000 pound capacity*

1-220
- *2000 pound capacity*

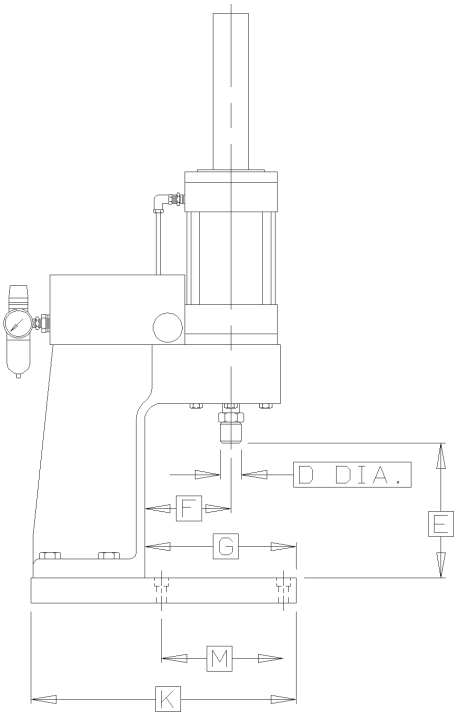

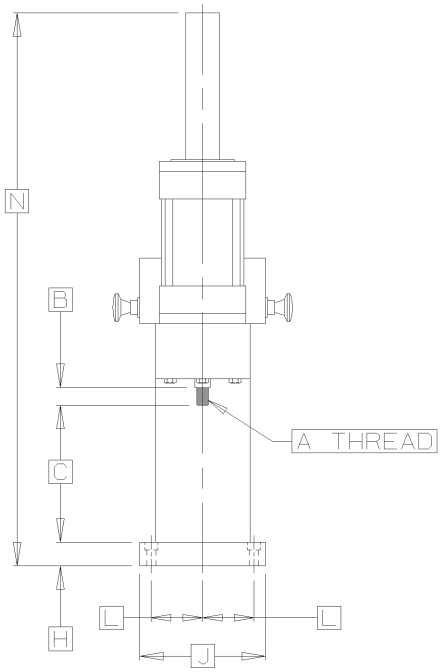

A thread	B length of thread	C daylight without nose piece	D nose piece diameter	E daylight with nose piece	F throat	G x J work area	H plate thickness	K x J base	M x L hole pattern	N overall height
inches	*inches*	*inches*	*inches*	*inches*	*inches*	*inches*	*inches*	*inches*	*inches*	*inches*
½-20	¾	5 11/16	1	5	5	9 x 6	1	13⅜ x 6	7¼ x 1¾	23
¾-16	1⅛	8 11/16	1¼	8	5	9 x 8	1¼	14 9/16 x 8	7¼ x 3¼	34
¾-16	1⅛	8 11/16	1¼	8	5	9 x 8	1½	15¾ x 8	7¼ x 3¼	35

C-frame Bench Presses

High speed, low cost, and ready for any press work you can think of

features

- **Adjustable return stroke,** activated by proximity switch, permits accurate control of ram movement.
- **Remote pressure adjustment** easily sets maximum pressure desired.
- **Light-sensitive thumb pads** must be engaged simultaneously before ram will move and cannot be mechanically by-passed.
- **Run-jog selector** allows fast, easy job set-up.
- **Hydraulic cylinders** are manufactured to withstand 3000 psi, but are used at less than 2000 psi to prolong service life.

models

28-604
- *4 ton capacity*

28-608
- *8 ton capacity*

28-612
- *12 ton capacity*

Note: *Press is shown without point of operation guarding. Guarding is required for safe operation—See ANSI B 11.2 bulletin.*

specifications

model	capacity	horsepower	rpm	ram speed			thread dimensions
	tons			inches per minute			
				advance	press	return	
28-604	**4**	1	1800	510	62	475	1″-14 x 1¼ deep
28-608	**8**	2	1800	481	39	447	1½″-12 x 1¾ deep
28-612	**12**	5	1800	511	62	474	1⅞″-12 x 1¾ deep

Specifications subject to change without notice.

DAKE®

For more information call 800-937-3253

standard equipment

For each press ordered, select the bolster, nose piece, and desired voltage that meet your needs.

- **Bolsters** *can easily be removed and replaced for different jobs. Select one for each press ordered. Additional bolsters are available as optional equipment.*
  - *1 Plain bolster*
  - *2 Bolster with u-slot*
  - *3 Bolster with bored hole*
- **Nose pieces** *available. Select one.*
  - *1 Threaded nose piece*
  - *2 Flanged nose piece*
- **Voltages** *available. Select one.*
  - *1 208 volts, 3 phase*
  - *2 230 volts, 3 phase*
  - *3 460 volts, 3 phase*
  - *4 575 volts, 3 phase*

optional equipment

- **Pedestals**
- **Air/oil heat exchanger**
- **Pressure reversal control**
- **Distance reversal control**
- **Variable speed control**
- **External dwell timer**
- **Piece/cycle counter**

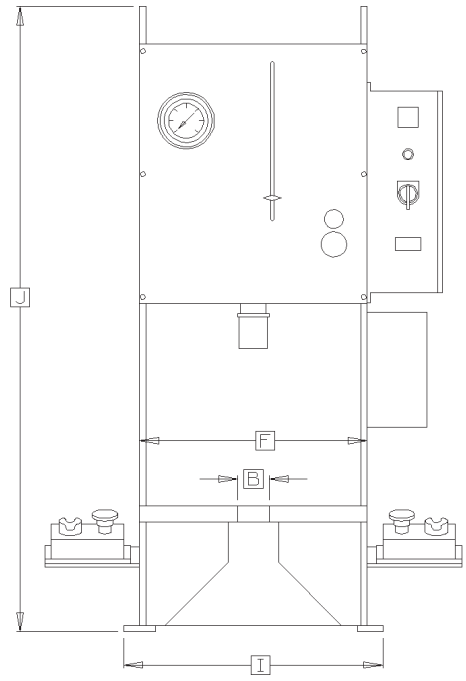

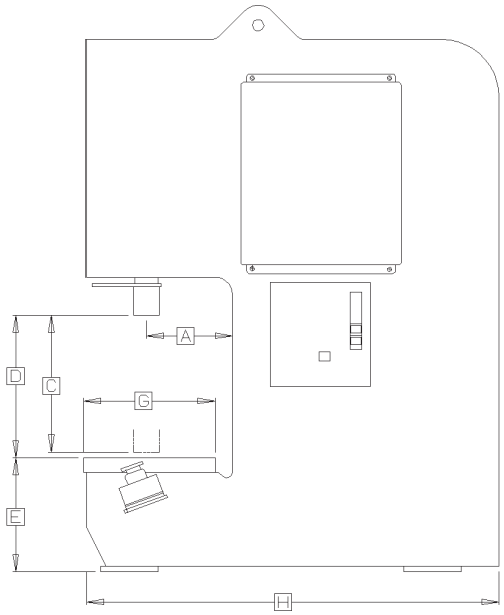

A throat	B table slot width	C ram travel	D maximum ram to table	E table to base	F x G table	H x I base	J height	weight
inches	*inches*	*inches*	*inches*	*inches*	*inches*	*inches*	*inches*	*pounds*
7½	2½	12	12½	10	18 x 11½	31 x 19¾	49¼	1229
7½	2½	12	12½	10	18 x 11½	36 x 20½	50	1355
10½	7	12	14½	12	23 x 19	47½ x 24¾	58⅝	2460

Laboratory Presses

For compression molding, laminating, testing and more.

features

■ **Electric platens:** The self-leveling, electrically heated, water cooled, precision ground steel platens are pre-wired into the control panel. Heating elements are replaceable.

■ **Precise temperature control:** Each platen has its own complete set of controls including adjustable thermoswitch, built-in thermometer, power switch and pilot light. Temperatures are accurately controlled from 100° to 600°F.

■ **Hydraulic system:** A unique pump design provides a rapid advance of the ram utilizing the high volume-low pressure portion of the pump. When the down stroke of the pump lever is used, the pump automatically converts to the high pressure-low volume output providing accurate control and easy operation. The carefully constructed hydraulic system enables the press to hold pressure for extra long periods of time. The release valve on the side of the press enables the operator to adjust the pressure accurately as well as accomplish gradual decompression or fast opening of the press.

specifications

model	*tonnage*	*max. temp F*	*watts per press*	*voltage single phase*	*amps*	*number of openings*
		degrees		*volts*		
44-225	25	600	2,900	120*	25	1
44-226	25	600	3,600	120*	30	1
44-250	50	600	4,800	240**	20	1
44-251	50	600	7,200	240**	30	1
44-275	75	600	10,800	240**	26	1

*240 Volts also available. **480 Volts also available.

Specifications subject to change without notice.

DAKE®

For more information call 800-937-3253

features *continued*

Two position ram: A removable adaptor is placed between the self-leveling platen and the ram. By removing the adaptor, a greater daylight dimension is available.

Control panel: A conveniently located panel at the top of the press is isolated from the press and is cooled by an air space between the housing and the upper platen. All electricals are mounted on a common plaque for easy servicing.

models

44-225
44-226
44-250
44-251
44-275

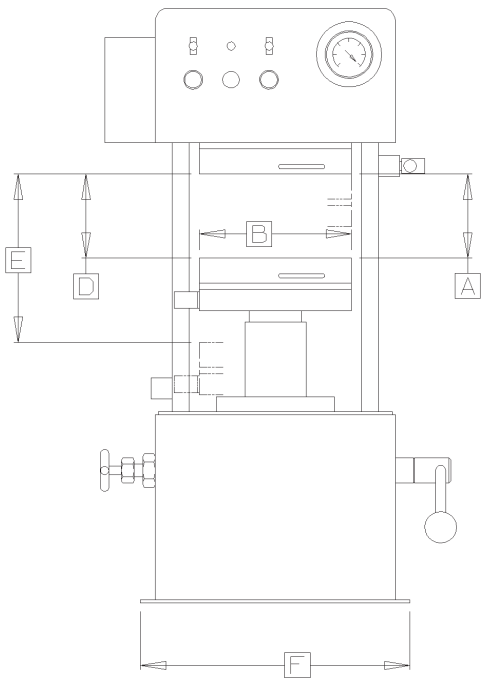

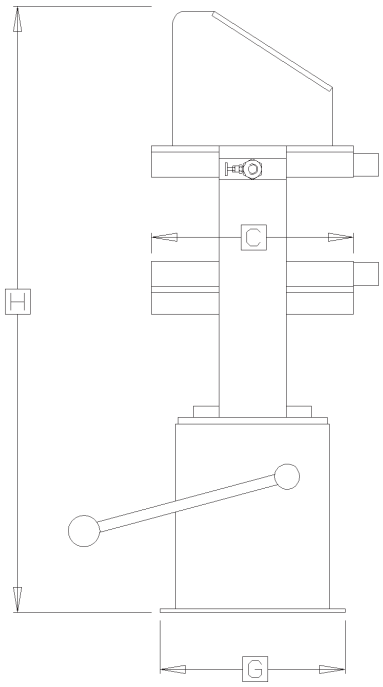

A	B x C	D	E	F x G	H	
stroke	*platens*	*daylight between each platen with adaptor*	*daylight between each platen without adaptor*	*base dimension*	*overall height*	*weight*
inches	*inches*	*inches*	*inches*	*inches*	*inches*	*pounds*
5	9 x 9	5	10	16 x 11	36	425
5	9 x 12	5	10	16 x 11	36	450
6	12½ x 12½	6	10	18 x 16	39	825
6	12½ x 19	6	10	18 x 16	39	925
6	19 x 19	6	12	26 x 21	51	1,900

Drill Presses

Modern design with the operator in mind

features

- **A locking handle hub** with convenient dial-in adjustment and an easy to read scale for fast, accurate, and repeatable depth setting changes.
- **CE safety electrical package features:** push button on/off switch, emergency stop button, low voltage controls, thermal overload, and interlock safety switch for belt cover.
- **Large diameter sturdy spindle** for rigid drilling has four bearing points for smooth operation.
- **Massive cast head,** machined column, and sturdy cast base reduces vibration.
- **Bench and floor models** both have machined table and base surfaces with t-slots for mounting and fixturing
- **Quick bit changes** with standard Morse Taper (MT), common adaptors or standard keyed chuck.
- **Quick release belt tensioning** for fast, easy speed changes.
- **Handle has 3 spokes** with spring return for precise operator control and ergonomic operation.

specifications

model	*part #*	*drill capacity*	*motor HP*	*spindle taper*	*working diameter*	*no. of speeds*	*spindle speed range*	*electrics*	*weight*
TB-16	77100	5/8"	1/2	MT2	14 1/8"	9	240-3400	CE 110V 1ph	380
SB-16	77200	5/8"	1/2	MT2	14 1/8"	9	240-3400	CE 110V 1ph	450
SB-25	77300	1"	1	MT3	18"	9	270-2000	CE 220V* 3ph	600
SB-32	77400	1 1/4"	2	MT4	18"	9	270-2290	CE 220V* 3ph	670

*Please specify voltage when ordering (220V/440V).

Specifications subject to change without notice.

DAKE®

For more information call 800-937-3253

standard equipment

- Keyless chuck
- Plexiglas chip & chuck guard
- Drift (for bit removal)

models

TB-16

SB-16

SB-25

SB-32

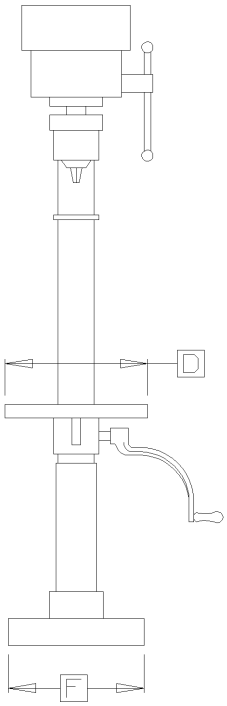

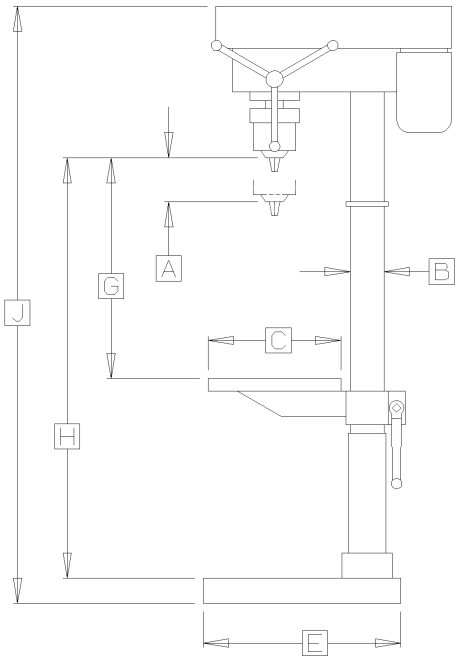

A	B	C	D	E	F	G	H	J
spindle travel	*column diameter*	*table depth*	*table width*	*base depth*	*base width*	*spindle to table*	*spindle to base*	*overall height*
3⅛”	3⅛”	11¾”	11¾”	17¾”	12¼”	16½”	26½”	42½”
3⅛”	3⅛”	11¾”	11¾”	19⅝”	12½”	28½”	49¼”	64”
5”	3⅝”	13¾”	13¾”	23⅝”	15”	28⅜”	49¼”	71”
5½”	4”	15¾”	15¾”	23⅝”	15”	26⅜”	50”	71”